SUNON®

AC Brushless
Fan & Blower

*All products are RoHS compliant.

Table of Contents

SUNON AC Axial Fan & Blower		
		Page
Engineering Information		p.01
Fan Model Numbering System		p.02
AC Fan Series	Air Flow (CFM)	
80x80x25mm	17 ~ 22	p.03
80x80x38mm	23 ~ 31	p.04
92x92x25mm	21 ~ 37	p.05
120x120x25mm (115V)	46 ~ 80	p.06
120x120x25mm (220-240V)	46 ~ 80	p.07
120x120x38mm (115V)	70 ~ 117	p.08
120x120x38mm (220-240V)	70 ~ 117	p.09
120x120x38mm (Low Power Consumption)	54 ~ 85	p.10
120x120x38mm (Plastic Frame)	85 ~ 100	p.11
120x120x38mm (New Type)	95 ~ 117	p.12
120x120x38mm (New Type-High Air Flow)	112 ~ 124	p.13
120x120x38mm (Dual AC Voltage)	95 ~ 115	p.14
120x120x38mm (Low Power Consumption)	49 ~ 50	p.15
171x151x51mm	180 ~ 200	p.16
171x151x51mm (Alveolate Motor)	203 ~ 239	p.17
ø171x51mm (Alveolate Motor)	203 ~ 239	p.18
176x176x89mm (Alveolate Motor)	315 ~ 335	p.19
ø254x89mm (Alveolate Motor)	425 ~ 870	p.20
120x120x31mm (Blower)	20 ~ 22	p.21

Certification

* Note: For critical or extreme environments, including non stop operation, please contact SUNON and we will gladly provide assistance with your product selection to ensure an appropriate cooling product for your application.
* Note: The "Life Expectancy" of the fan has not been evaluated for use in combination with any end application. Therefore, the Life Expectancy Test Reports(L10 and MTTF Report) that relate to the fan are only for reference.

ENGINEERING INFORMATION

Alveolate Motor AC fan series with automatic motor-wire wrapping technology ensures stable performance of high wind volume, low acoustic noise, also available with functions of dual spinning rate, and thermal cutout.

SUNON-Alveolate Motor VS. Traditional Shaded-pole Motor

SUNON-Alveolate Motor	Traditional Shaded-Pole Motor
1.The Alvolate Motor is equipped with starting stator coils and working ones. The starting coils form a low starting voltage with the capacitors. For example, an 115VAC (the fixed voltage) Alveolate Motor can be started with 60 VAC.	1.The Traditional Shaded-Pole Motor, designed with single-wire wrapping, is started by "the starting copper" and cannot be started with low voltage. An 115VAC Traditional Shaded-Pole motor will need more than 80VAC to run, 20VAC more than the Alveolate one.
2.The coils do not produce high temperature and consumes less electricity. The temperature is normally around 50℃. Therefore, the motor is always stable and reliable.	2.The Traditional Shaded-Pole Motor consumes electricity twice as much as the Alveolate Motor. It is not reliable because the temperature is usually higher than 70℃.
3.The Thermal Cutout can protect the motor.	3.The Thermal Cutout is an option.
4.The motor has a large torsion to produce high wind pressure and wind volume.	4.General wind pressure and wind volume.
5.The motor is equipped with the third wire, ready to comply with the customer's systems.	5.Without the third wire.

AC Fan Model Numbering System

General AC Fan

Ex) **SF11580AT 1 08 2 H B L .GN**

MODEL SERIES
SFxxx
SPxxx
DPxxx

VOLTAGE
1 : 115 VAC
2 : 220 -240 VAC

FRAME SIZE
08 : 80 mm
09 : 92 mm
12 : 120 mm

FRAME THICKNESS
2 : 25 mm
3 : 38 mm

SPEED
X : Super
H : High
M : Middle
L : Low

BEARING SYSTEM
B : Ball
S : Sleeve

TERMINALS
T : Terminal
L : Lead wire

RoHS Compliance

New Type AC Fan

Ex) **A 1 17 5 — H B T**

MODEL SERIES
A : New AC fan series
AB : New AC blower series
MA : MagLev AC Fan series

VOLTAGE
1 : 115 VAC 3 : 380 VAC
2 : 220-240 VAC

FRAME SIZE
08 : 80 mm 17 : 172 mm
09 : 92 mm 25 : 254 mm
12 : 120 mm

FRAME THICKNESS
2 : 25 mm 7 : 72 mm
3 : 31~38mm 9 : 89~90mm
5 : 50~51 mm

SPEED
X : Super
H : High
M : Middle
L : Low

BEARING SYSTEM
V: MagLev
S : Sleeve
B : Ball

TERMINALS
T : Terminal
L : Lead wire

P/N

P/N Suffixes have the following significance :

T	: Thermal Cutout
TC	: Alveolate Motor with Thermal Cutout and Capacitor
TC.R	: Round Frame , Alveolate Motor with Thermal Cutout and Capacitor
N	: New frame
GN	: RoHS compliance

* Alveolate Motor only available in P/N : TC model

80x80x25 mm

17~22 CFM

Specifications

Model	P/N	Bearing	Rating Voltage	Freq.	Power Current	Power Consumption	Speed	Air Flow	Static Pressure	Noise	Weight
		● VAPO ○ BALL ⦿ Sleeve	(VAC)	(Hz)	(AMP)	(WATTS)	(RPM)	(CFM)	(Inch-H_2O)	(dB(A))	(g)
SF11580AT	1082HSL.GN	⦿	115	50/60	0.12/0.10	12/11	2300/2750	17/21	0.12/0.18	29/33	260
SF11580AT	1082HBL.GN	○	115	50/60	0.12/0.10	12/11	2450/2900	18/22	0.13/0.19	30/34.5	260
SF23080AT	2082HSL.GN	⦿	220-240	50/60	0.07/0.07	14/13.5	2300/2750	17/21	0.12/0.18	29/33	260
SF23080AT	2082HBL.GN	○	220-240	50/60	0.07/0.07	14/13.5	2450/2900	18/22	0.13/0.19	30/34.5	260

Frame : Aluminum alloy

Safety : UL-CUL/TUV NORD/CE/CCC

Air Flow-Static Pressure Characteristics

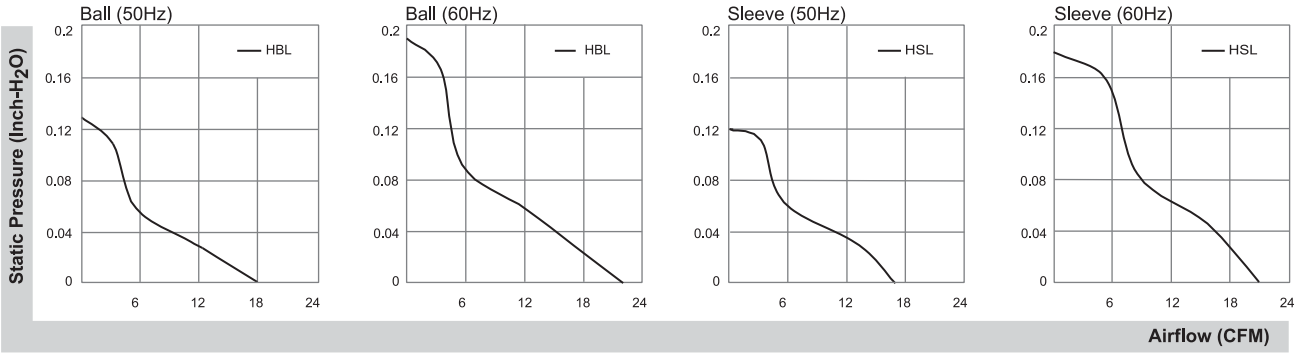

External dimensions(mm)

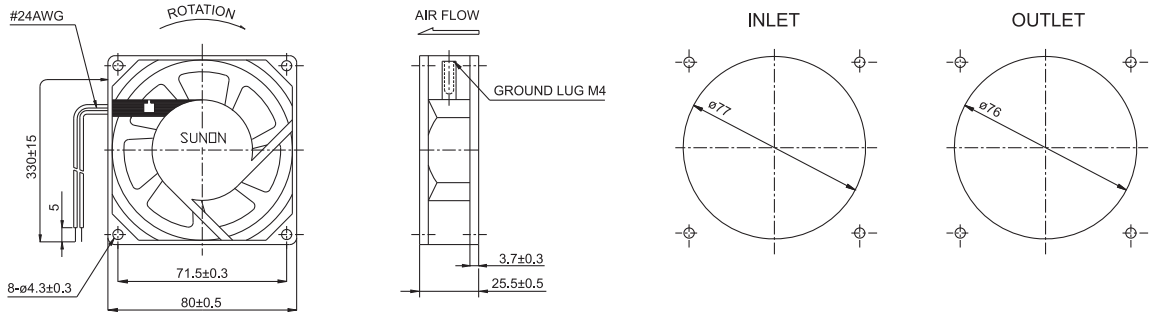

*All model could be customized. Please contact with Sunon Sales.
*Specifications are subject to change without notice. Please Visit SUNON website at http://www.sunon.com for update information.

80x80x38 mm

23~31 CFM

Specifications

Model	P/N	Bearing	Rating Voltage	Freq.	Power Current	Power Consumption	Speed	Air Flow	Static Pressure	Noise	Weight
		● VAPO ○ BALL ⦿ Sleeve	(VAC)	(Hz)	(AMP)	(WATTS)	(RPM)	(CFM)	(Inch-H_2O)	(dB(A))	(g)
SF11580A	1083HSL.GN	⦿	115	50/60	0.15/0.13	14/12	2300/2750	23/30	0.12/0.18	31/35	340
SF11580A	1083HBL.GN	○	115	50/60	0.15/0.13	14/12	2400/2850	24/31	0.13/0.19	32/36.5	340
SF23080A	2083HSL.GN	⦿	220-240	50/60	0.09/0.08	18/16	2300/2750	23/30	0.12/0.18	31/35	340
SF23080A	2083HBL.GN	○	220-240	50/60	0.09/0.08	18/16	2400/2850	24/31	0.13/0.19	32/36.5	340

Frame : Aluminum alloy

Safety : UL-CUL/TUV NORD/CE/CCC

Air Flow-Static Pressure Characteristics

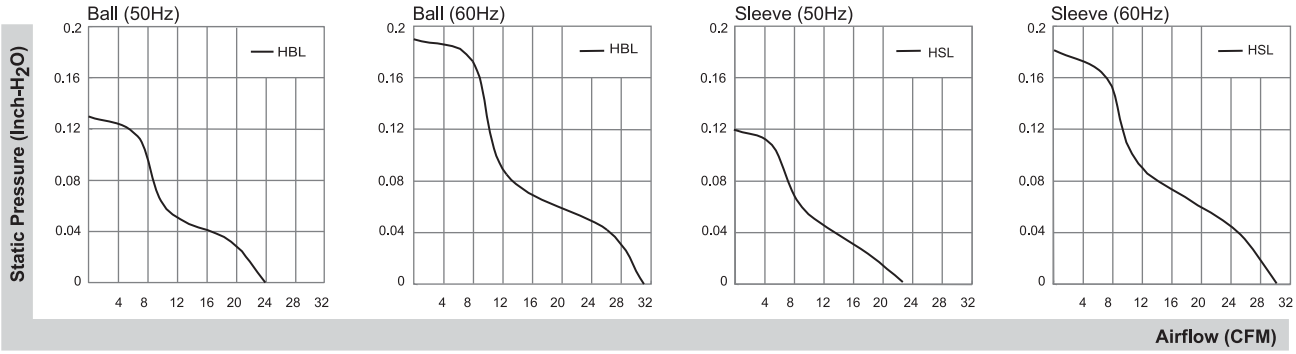

External dimensions(mm)

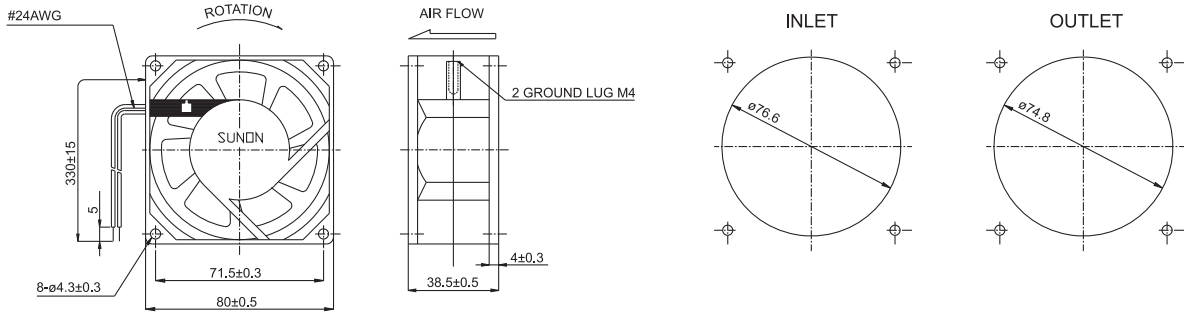

*All model could be customized. Please contact with Sunon Sales.
*Specifications are subject to change without notice. Please Visit SUNON website at http://www.sunon.com for update information.

92x92x25 mm

21~37 CFM

Specifications

Model	P/N	Bearing	Rating Voltage	Freq.	Power Current	Power Consumption	Speed	Air Flow	Static Pressure	Noise	Weight
		● VAPO ○ BALL ⦿ Sleeve	(VAC)	(Hz)	(AMP)	(WATTS)	(RPM)	(CFM)	(Inch-H_2O)	(dB(A))	(g)
SF11592A	1092HSL.GN	⦿	115	50/60	0.12/0.11	13/12	2250/2750	29/36	0.12/0.18	36/39	280
SF11592A	1092HST.GN	⦿	115	50/60	0.12/0.11	13/12	2250/2750	29/36	0.12/0.18	36/39	280
SF11592A	1092MSL.GN	⦿	115	50/60	0.06/0.06	7/6	1550/1700	21/26	0.08/0.09	28/30	280
SF11592A	1092MST.GN	⦿	115	50/60	0.06/0.06	7/6	1550/1700	21/26	0.08/0.09	28/30	280
SF11592A	1092HBL.GN	○	115	50/60	0.12/0.11	13/12	2350/2850	30/37	0.13/0.19	37/40	280
SF11592A	1092HBT.GN	○	115	50/60	0.12/0.11	13/12	2350/2850	30/37	0.13/0.19	37/40	280
SF11592A	1092MBL.GN	○	115	50/60	0.07/0.06	7/6	1800/2100	23/28	0.10/0.11	31/33	280
SF11592A	1092MBT.GN	○	115	50/60	0.07/0.06	7/6	1800/2100	23/28	0.10/0.11	31/33	280
SF23092A	2092HSL.GN	⦿	220-240	50/60	0.07/0.06	14.5/14	2250/2750	29/36	0.12/0.18	36/39	280
SF23092A	2092HST.GN	⦿	220-240	50/60	0.07/0.06	14.5/14	2250/2750	29/36	0.12/0.18	36/39	280
SF23092A	2092MSL.GN	⦿	220-240	50/60	0.07/0.07	15/14	2000/2500	27/33	0.11/0.16	32/37	280
SF23092A	2092MST.GN	⦿	220-240	50/60	0.07/0.07	15/14	2000/2500	27/33	0.11/0.16	32/37	280
SF23092A	2092HBL.GN	○	220-240	50/60	0.07/0.06	14.5/14	2350/2850	30/37	0.13/0.19	37/40	280
SF23092A	2092HBT.GN	○	220-240	50/60	0.07/0.06	14.5/14	2350/2850	30/37	0.13/0.19	37/40	280
SF23092A	2092MBL.GN	○	220-240	50/60	0.07/0.07	15/14	2200/2700	28/35	0.12/0.18	35/38	280
SF23092A	2092MBT.GN	○	220-240	50/60	0.07/0.07	15/14	2200/2700	28/35	0.12/0.18	35/38	280

Frame : Aluminum alloy

Safety : UL-CUL/TUV NORD/CE/CCC

Air Flow-Static Pressure Characteristics

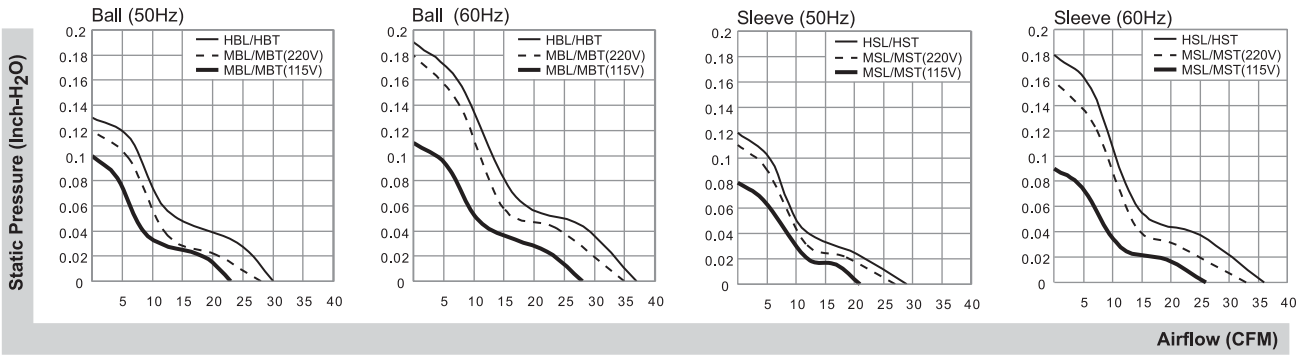

External dimensions(mm)

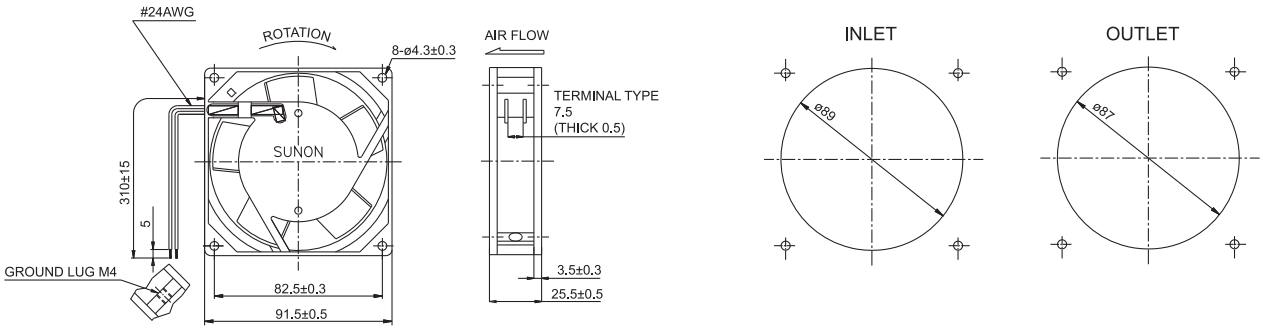

*All model could be customized. Please contact with Sunon Sales.

*Specifications are subject to change without notice. Please Visit SUNON website at http://www.sunon.com for update information.

120x120x25 mm

46~80 CFM

Specifications

Model	P/N	Bearing	Rating Voltage	Freq.	Power Current	Power Consumption	Speed	Air Flow	Static Pressure	Noise	Weight
		● VAPO ○ BALL ◉ Sleeve	(VAC)	(Hz)	(AMP)	(WATTS)	(RPM)	(CFM)	(Inch-H_2O)	(dB(A))	(g)
SP101AT	1122HSL.GN	◉	115	50/60	0.21/0.19	19/18	2000/2300	64/78	0.13/0.16	43/46	330
SP101AT	1122HST.GN	◉	115	50/60	0.21/0.19	19/18	2000/2300	64/78	0.13/0.16	43/46	330
SP103AT	1122LSL.GN	◉	115	50/60	0.14/0.13	14/13	1600/1800	46/53	0.11/0.12	35/38	330
SP103AT	1122LST.GN	◉	115	50/60	0.14/0.13	14/13	1600/1800	46/53	0.11/0.12	35/38	330
SP101AT	1122HBL.GN	○	115	50/60	0.21/0.19	19/18	2150/2500	66/80	0.14/0.17	44/48	330
SP101AT	1122HBT.GN	○	115	50/60	0.21/0.19	19/18	2150/2500	66/80	0.14/0.17	44/48	330
SP103AT	1122LBL.GN	○	115	50/60	0.12/0.11	12.5/11.5	1700/1900	47/54	0.12/0.13	37/40	330
SP103AT	1122LBT.GN	○	115	50/60	0.12/0.11	12.5/11.5	1700/1900	47/54	0.12/0.13	37/40	330

Frame : Aluminum alloy

Safety : UL-CUL/TUV/CE/CCC

Air Flow-Static Pressure Characteristics

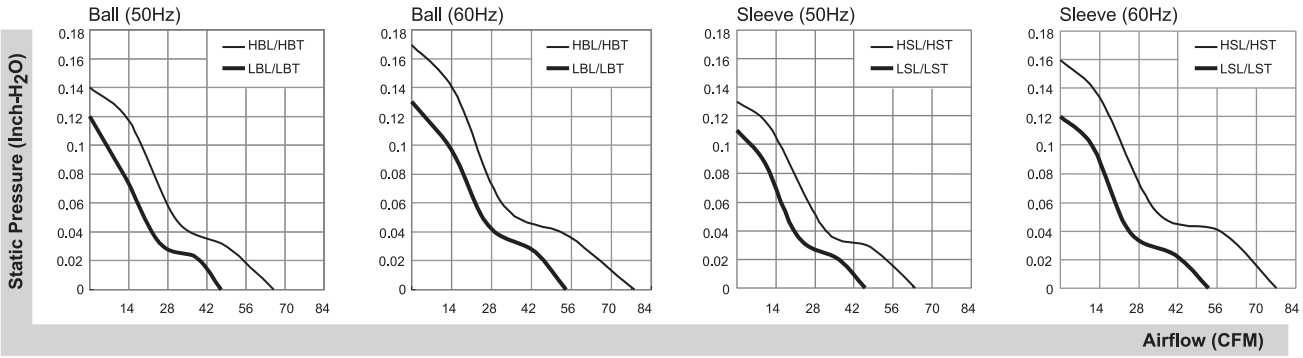

External dimensions(mm)

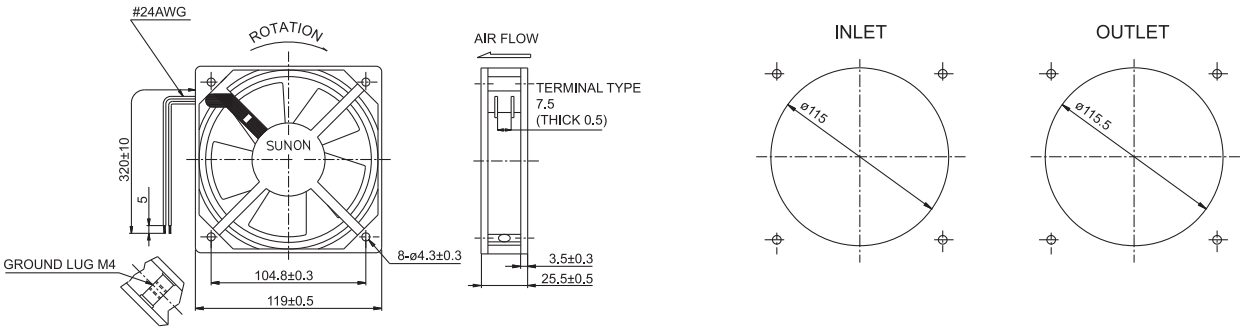

*All model could be customized. Please contact with Sunon Sales.
*Specifications are subject to change without notice. Please Visit SUNON website at http://www.sunon.com for update information.

120x120x25 mm

46~80 CFM

Specifications

Model	P/N	Bearing	Rating Voltage	Freq.	Power Current	Power Consumption	Speed	Air Flow	Static Pressure	Noise	Weight
		● VAPO ○ BALL ◉ Sleeve	(VAC)	(Hz)	(AMP)	(WATTS)	(RPM)	(CFM)	(Inch-H_2O)	(dB(A))	(g)
DP201AT	2122HSL.GN	◉	220/240	50/60	0.09/0.09	19/19	2000/2300	64/78	0.13/0.16	43/46	295
DP201AT	2122HST.GN	◉	220/240	50/60	0.09/0.09	19/19	2000/2300	64/78	0.13/0.16	43/46	295
DP203AT	2122LSL.GN	◉	220/240	50/60	0.07/0.07	14/13	1600/1800	46/53	0.11/0.12	35/38	330
DP203AT	2122LST.GN	◉	220/240	50/60	0.07/0.07	14/13	1600/1800	46/53	0.11/0.12	35/38	330
DP201AT	2122HBL.GN	○	220/240	50/60	0.09/0.09	18/16.5	2150/2500	66/80	0.14/0.17	44/48	295
DP201AT	2122HBT.GN	○	220/240	50/60	0.09/0.09	18/16.5	2150/2500	66/80	0.14/0.17	44/48	295
DP203AT	2122LBL.GN	○	220/240	50/60	0.07/0.07	14/13	1700/1900	47/54	0.12/0.13	37/40	330
DP203AT	2122LBT.GN	○	220/240	50/60	0.07/0.07	14/13	1700/1900	47/54	0.12/0.13	37/40	330

Frame : Aluminum alloy

Safety : UL-CUL/TUV/CE/CCC

Air Flow-Static Pressure Characteristics

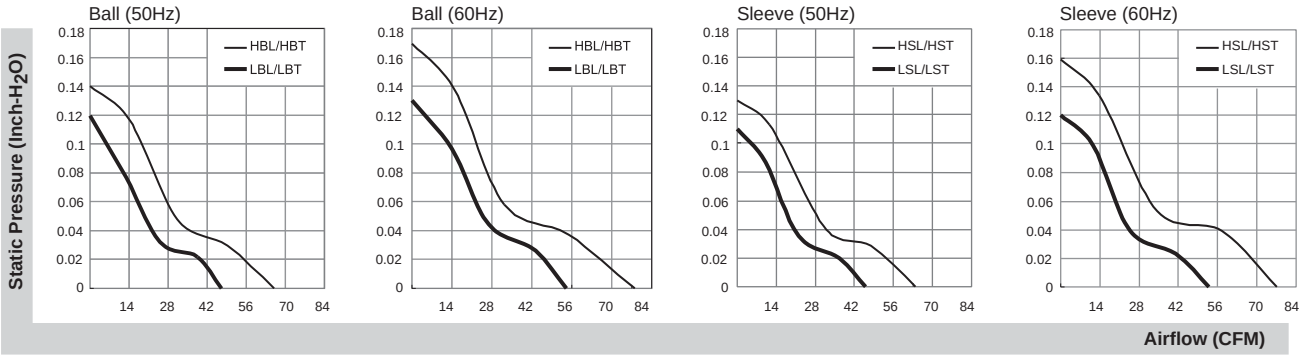

External dimensions(mm)

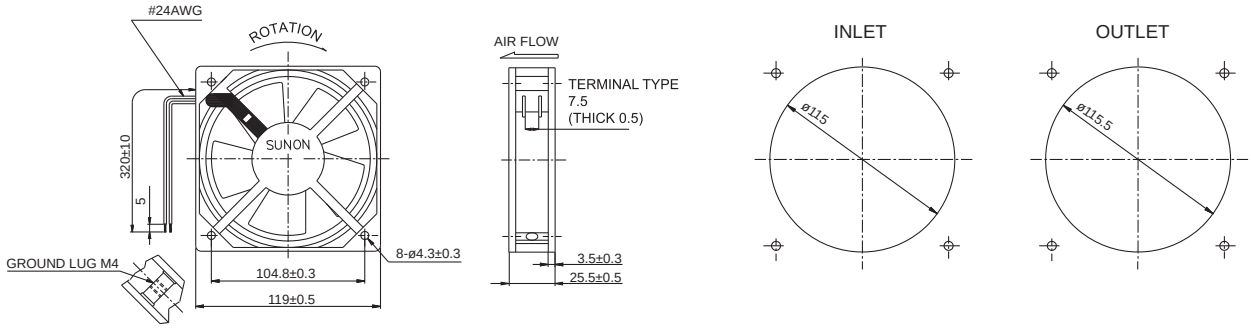

*All model could be customized. Please contact with Sunon Sales.
*Specifications are subject to change without notice. Please Visit SUNON website at http://www.sunon.com for update information.

120x120x38 mm

70~117 CFM

Specifications

Model	P/N	Bearing	Rating Voltage	Freq.	Power Current	Power Consumption	Speed	Air Flow	Static Pressure	Noise	Weight
		● VAPO ○ BALL ⦿ Sleeve	(VAC)	(Hz)	(AMP)	(WATTS)	(RPM)	(CFM)	(Inch-H_2O)	(dB(A))	(g)
SP100A	1123XSL.GN	⦿	115	50/60	0.26/0.24	22/20	2700/3100	95/115	0.33/0.38	44/49	550
SP100A	1123XST.GN	⦿	115	50/60	0.26/0.24	22/20	2700/3100	95/115	0.33/0.38	44/49	550
SP101A	1123HSL.GN	⦿	115	50/60	0.21/0.18	20/18	2550/2900	85/105	0.25/0.30	43/48	550
SP101A	1123HST.GN	⦿	115	50/60	0.21/0.18	20/18	2550/2900	85/105	0.25/0.30	43/48	550
SP102A	1123MSL.GN	⦿	115	50/60	0.17/0.16	15/15	2400/2600	78/84	0.14/0.21	33/38	550
SP102A	1123MST.GN	⦿	115	50/60	0.17/0.16	15/15	2400/2600	78/84	0.14/0.21	33/38	550
SP103A	1123LSL.GN	⦿	115	50/60	0.13/0.11	11/11	2200/2000	76/70	0.12/0.08	38/36	550
SP103A	1123LST.GN	⦿	115	50/60	0.13/0.11	11/11	2200/2000	76/70	0.12/0.08	38/36	550
SP100A	1123XBL.GN	○	115	50/60	0.26/0.24	22/20	2850/3150	97/117	0.34/0.39	45/50	550
SP100A	1123XBT.GN	○	115	50/60	0.26/0.24	22/20	2850/3150	97/117	0.34/0.39	45/50	550
SP101A	1123HBL.GN	○	115	50/60	0.21/0.18	20/18	2750/3050	87/107	0.26/0.32	45/50	550
SP101A	1123HBT.GN	○	115	50/60	0.21/0.18	20/18	2750/3050	87/107	0.26/0.32	45/50	550
SP102A	1123MBL.GN	○	115	50/60	0.17/0.16	16/15	2500/2700	80/88	0.15/0.22	35/40	550
SP102A	1123MBT.GN	○	115	50/60	0.17/0.16	16/15	2500/2700	80/88	0.15/0.22	35/40	550
SP103A	1123LBL.GN	○	115	50/60	0.13/0.11	11/11	2150/2300	72/78	0.09/0.13	37/39	550
SP103A	1123LBT.GN	○	115	50/60	0.13/0.11	11/11	2150/2300	72/78	0.09/0.13	37/39	550

Frame : Aluminum alloy

Safety : UL-CUL/TUV/CE/CCC

Air Flow-Static Pressure Characteristics

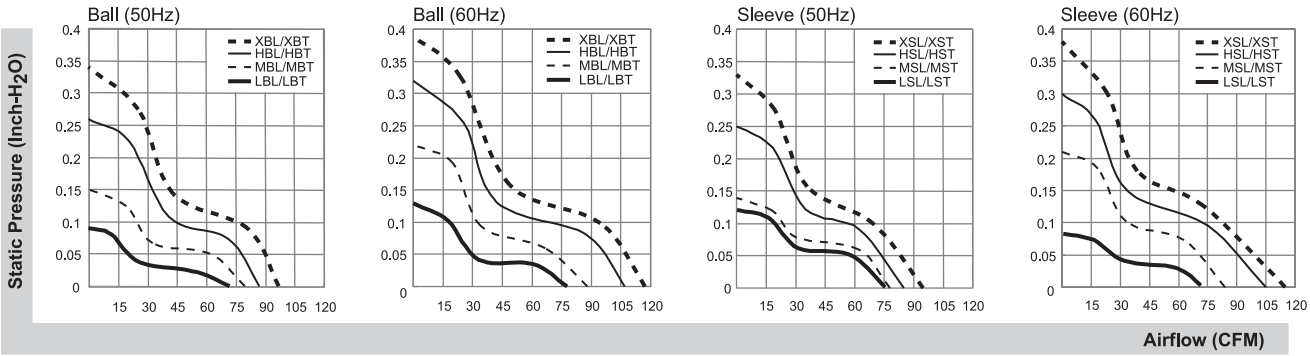

External dimensions(mm)

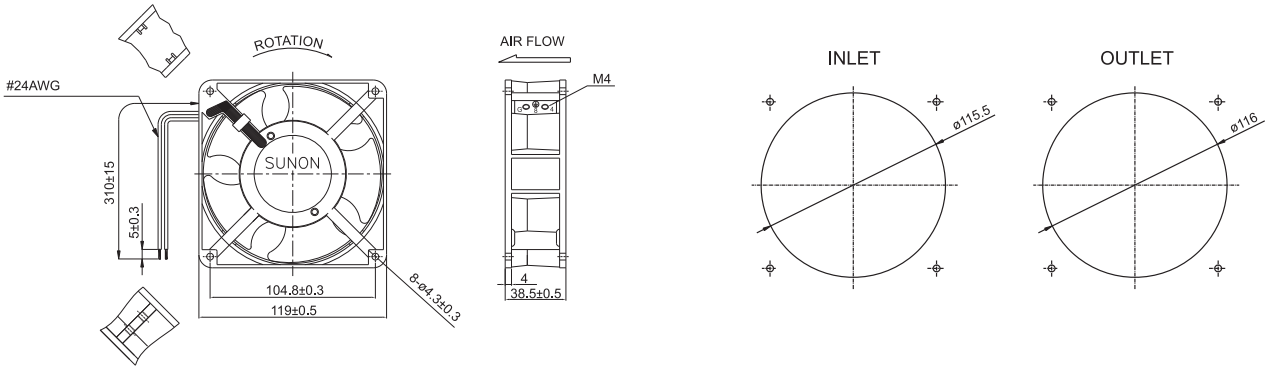

*All model could be customized. Please contact with Sunon Sales.
*Specifications are subject to change without notice. Please Visit SUNON website at http://www.sunon.com for update information.

120x120x38 mm

70~117 CFM

Specifications

Model	P/N	Bearing	Rating Voltage	Freq.	Power Current	Power Consumption	Speed	Air Flow	Static Pressure	Noise	Weight
		● VAPO ○ BALL ⦿ Sleeve	(VAC)	(Hz)	(AMP)	(WATTS)	(RPM)	(CFM)	(Inch-H_2O)	(dB(A))	(g)
DP200A	2123XSL.GN	⦿	220-240	50/60	0.14/0.12	22/21	2700/3100	95/115	0.33/0.38	44/49	550
DP200A	2123XST.GN	⦿	220-240	50/60	0.14/0.12	22/21	2700/3100	95/115	0.33/0.38	44/49	550
DP201A	2123HSL.GN	⦿	220-240	50/60	0.125/0.11	20/19	2550/2900	85/105	0.25/0.30	43/48	550
DP201A	2123HST.GN	⦿	220-240	50/60	0.125/0.11	20/19	2550/2900	85/105	0.25/0.30	43/48	550
DP202A	2123MSL.GN	⦿	220-240	50/60	0.09/0.08	16/15	2300/2500	78/84	0.14/0.21	33/38	550
DP202A	2123MST.GN	⦿	220-240	50/60	0.09/0.08	16/15	2300/2500	78/84	0.14/0.21	33/38	550
DP203A	2123LSL.GN	⦿	220-240	50/60	0.06/0.05	11/10	2000/1800	70/63	0.08/0.07	36/32	550
DP203A	2123LST.GN	⦿	220-240	50/60	0.06/0.05	11/10	2000/1800	70/63	0.08/0.07	36/32	550
DP200A	2123XBL.GN	○	220-240	50/60	0.14/0.12	22/21	2850/3150	97/117	0.34/0.39	45/50	550
DP200A	2123XBT.GN	○	220-240	50/60	0.14/0.12	22/21	2850/3150	97/117	0.34/0.39	45/50	550
DP201A	2123HBL.GN	○	220-240	50/60	0.125/0.11	20/19	2750/3050	87/107	0.26/0.32	45/50	550
DP201A	2123HBT.GN	○	220-240	50/60	0.125/0.11	20/19	2750/3050	87/107	0.26/0.32	45/50	550
DP202A	2123MBL.GN	○	220-240	50/60	0.09/0.08	16/15	2400/2600	78/84	0.14/0.21	34/39	550
DP202A	2123MBT.GN	○	220-240	50/60	0.09/0.08	16/15	2400/2600	78/84	0.14/0.21	34/39	550
DP203A	2123LBL.GN	○	220-240	50/60	0.05/0.06	10/10	2300/2150	78/72	0.13/0.09	39/37	550
DP203A	2123LBT.GN	○	220-240	50/60	0.05/0.06	10/10	2300/2150	78/72	0.13/0.09	39/37	550

Frame : Aluminum alloy

Safety : UL-CUL/TUV/CE/CCC

Air Flow-Static Pressure Characteristics

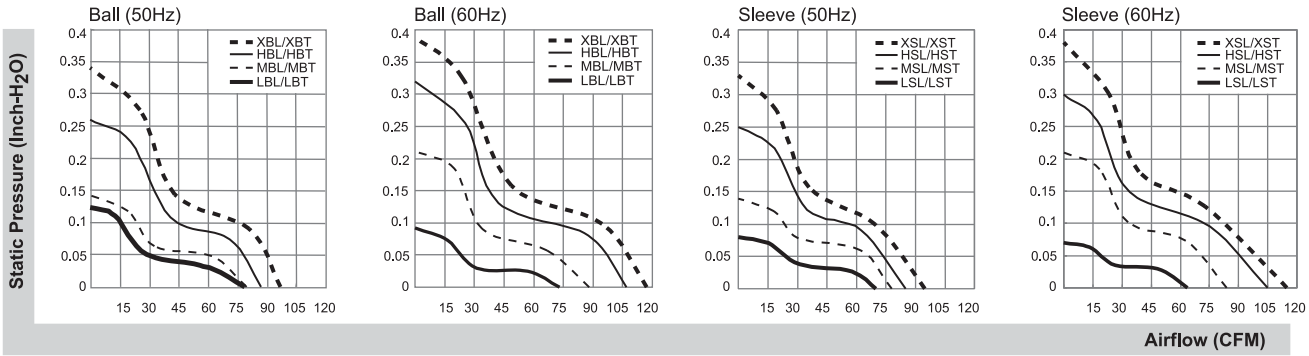

External dimensions(mm)

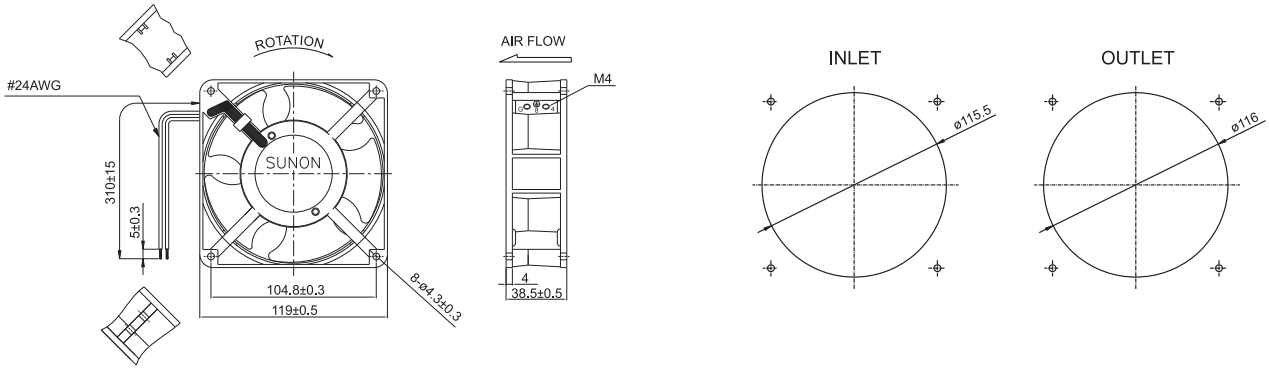

*All model could be customized. Please contact with Sunon Sales.
*Specifications are subject to change without notice. Please Visit SUNON website at http://www.sunon.com for update information.

120x120x38 mm

Low Power Consumption

54~85 CFM

Specifications

Model	P/N	Bearing	Rating Voltage	Freq.	Power Current	Power Consumption	Speed	Air Flow	Static Pressure	Noise	Weight
		● VAPO ○ BALL ⦿ Sleeve	(VAC)	(Hz)	(AMP)	(WATTS)	(RPM)	(CFM)	(Inch-H_2O)	(dB(A))	(g)
SP102A	1123MSL.S.GN	⦿	115	50/60	0.150/0.140	12.2/11.6	2500/2400	80/78	0.15/0.14	42/41	460
SP102A	1123MST.S.GN	⦿	115	50/60	0.150/0.140	12.2/11.6	2500/2400	80/78	0.15/0.14	42/41	460
SP103A	1123LSL.S.GN	⦿	115	50/60	0.140/0.125	11.8/10.9	2250/2100	76/70	0.12/0.10	39/37	460
SP103A	1123LST.S.GN	⦿	115	50/60	0.140/0.125	11.8/10.9	2250/2100	76/70	0.12/0.10	39/37	460
SP102A	1123MBL.S.GN	○	115	50/60	0.150/0.140	12.2/12.0	2500/2600	80/84	0.15/0.21	43/43	460
SP102A	1123MBT.S.GN	○	115	50/60	0.150/0.140	12.2/12.0	2500/2600	80/84	0.15/0.21	43/43	460
SP103A	1123LBL.S.GN	○	115	50/60	0.136/0.122	11.5/10.6	2300/2350	77/78	0.13/0.13	39/39	460
SP103A	1123LBT.S.GN	○	115	50/60	0.136/0.122	11.5/10.6	2300/2350	77/78	0.13/0.13	39/39	460
DP201A	2123HSL.S.GN	⦿	220-240	50/60	0.069/0.070	10.8/10.4	2550/2300	85/78	0.25/0.13	43/42	480
DP201A	2123HST.S.GN	⦿	220-240	50/60	0.069/0.070	10.8/10.4	2550/2300	85/78	0.25/0.13	43/42	480
DP202A	2123MSL.S.GN	⦿	220-240	50/60	0.057/0.055	9.9/9.8	2300/1550	78/56	0.13/0.07	41/31	480
DP202A	2123MST.S.GN	⦿	220-240	50/60	0.057/0.055	9.9/9.8	2300/1550	78/56	0.13/0.07	41/31	480
DP203A	2123LSL.S.GN	⦿	220-240	50/60	0.055/0.047	8.3/7.9	2000/1500	70/54	0.08/0.06	36/31	480
DP203A	2123LST.S.GN	⦿	220-240	50/60	0.055/0.047	8.3/7.9	2000/1500	70/54	0.08/0.06	36/31	480
DP201A	2123HBL.S.GN	○	220-240	50/60	0.069/0.065	10.8/10.4	2550/2550	85/85	0.25/0.25	44/45	480
DP201A	2123HBT.S.GN	○	220-240	50/60	0.069/0.065	10.8/10.4	2550/2550	85/85	0.25/0.25	44/45	480
DP202A	2123MBL.S.GN	○	220-240	50/60	0.057/0.056	9.9/9.6	2400/1950	79/68	0.14/0.08	42/38	480
DP202A	2123MBT.S.GN	○	220-240	50/60	0.057/0.056	9.9/9.6	2400/1950	79/68	0.14/0.08	42/38	480
DP203A	2123LBL.S.GN	○	220-240	50/60	0.048/0.045	8.2/7.6	2300/1850	78/63	0.13/0.07	39/35	480
DP203A	2123LBT.S.GN	○	220-240	50/60	0.048/0.045	8.2/7.6	2300/1850	78/63	0.13/0.07	39/35	480

Frame : Aluminum alloy

Safety : UL-CUL/TUV/CE/CCC

Air Flow-Static Pressure Characteristics

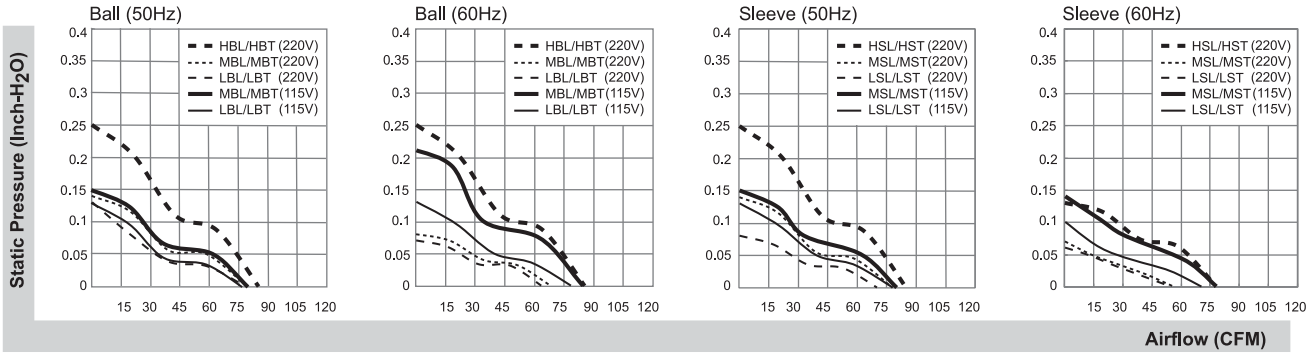

External dimensions(mm)

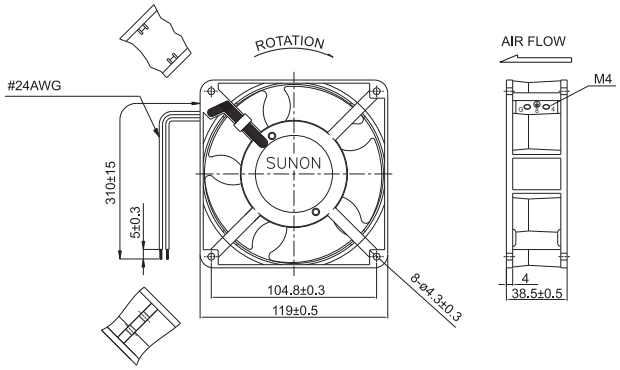

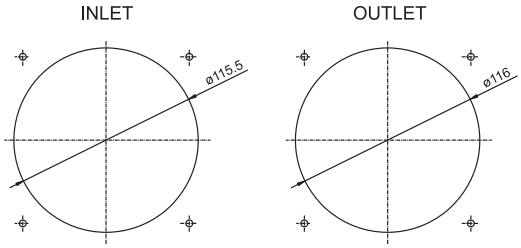

*All model could be customized. Please contact with Sunon Sales.

*Specifications are subject to change without notice. Please Visit SUNON website at http://www.sunon.com for update information.

120x120x38 mm

85~100 CFM

Specifications

Model	P/N	Bearing	Rating Voltage	Freq.	Power Current	Power Consumption	Speed	Air Flow	Static Pressure	Noise	Weight
		● VAPO ○ BALL ⊙ Sleeve	(VAC)	(Hz)	(AMP)	(WATTS)	(RPM)	(CFM)	(Inch-H_2O)	(dB(A))	(g)
SP109WR	1123HST.GN	⊙	115	50/60	0.25/0.22	22/20	2500/2900	85/100	0.28/0.35	41/47	465
SP109WR	1123HSL.GN	⊙	115	50/60	0.25/0.22	22/20	2500/2900	85/100	0.28/0.35	41/47	465
SP109WR	1123HBT.GN	○	115	50/60	0.25/0.22	22/20	2500/2900	85/100	0.25/0.30	42/48	465
SP109WR	1123HBL.GN	○	115	50/60	0.25/0.22	22/20	2500/2900	85/100	0.25/0.30	42/48	465
DP209WR	2123HST.GN	⊙	220-240	50/60	0.13/0.12	22/21	2500/2900	85/100	0.28/0.35	41/47	465
DP209WR	2123HSL.GN	⊙	220-240	50/60	0.13/0.12	22/21	2500/2900	85/100	0.28/0.35	41/47	465
DP209WR	2123HBT.GN	○	220-240	50/60	0.13/0.12	22/21	2500/2900	85/100	0.25/0.30	42/48	465
DP209WR	2123HBL.GN	○	220-240	50/60	0.13/0.12	22/21	2500/2900	85/100	0.25/0.30	42/48	465

Frame : PBT Plastic

Safety : UL-CUL/TUV/CE/CCC

Air Flow-Static Pressure Characteristics

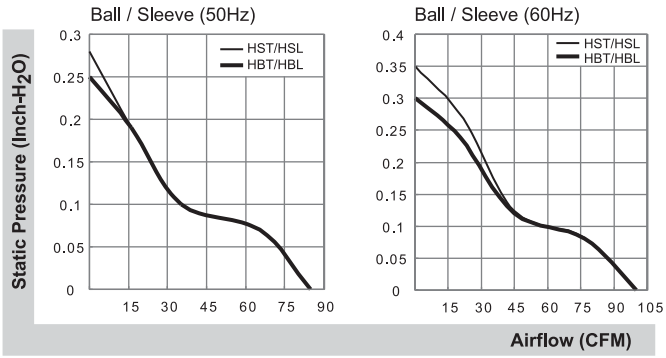

External dimensions(mm)

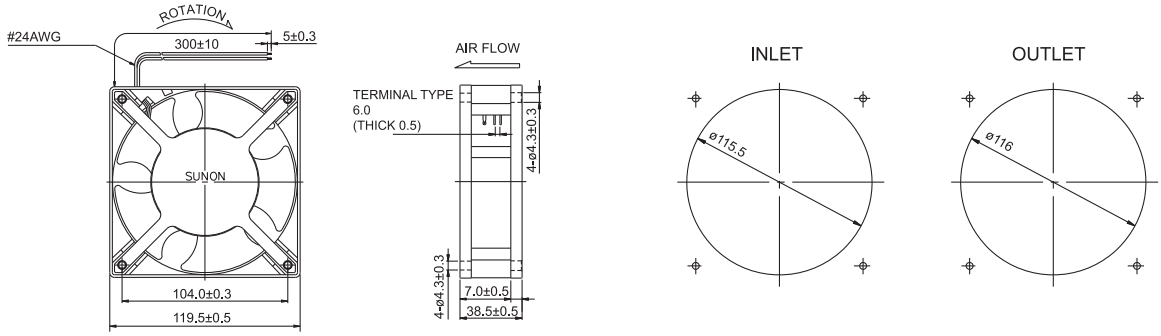

*All model could be customized. Please contact with Sunon Sales.
*Specifications are subject to change without notice. Please Visit SUNON website at http://www.sunon.com for update information.

120x120x38 mm

95~117 CFM

Specifications

Model	P/N	Bearing	Rating Voltage	Freq.	Power Current	Power Consumption	Speed	Air Flow	Static Pressure	Noise	Weight
		● VAPO ○ BALL ◉ Sleeve	(VAC)	(Hz)	(AMP)	(WATTS)	(RPM)	(CFM)	(Inch-H_2O)	(dB(A))	(g)
A1123-HST	GN	◉	115	50/60	0.28/0.25	23/20	2700/3100	95/115	0.33/0.38	44/49	525
A1123-HSL	GN	◉	115	50/60	0.28/0.25	23/20	2700/3100	95/115	0.33/0.38	44/49	525
A1123-HBT	GN	○	115	50/60	0.28/0.25	23/20	2700/3100	97/117	0.34/0.39	45/50	525
A1123-HBL	GN	○	115	50/60	0.28/0.25	23/20	2700/3100	97/117	0.34/0.39	45/50	525
A2123-HST	GN	◉	220-240	50/60	0.14/0.12	23/20	2700/3100	95/115	0.33/0.38	44/49	525
A2123-HSL	GN	◉	220-240	50/60	0.14/0.12	23/20	2700/3100	95/115	0.33/0.38	44/49	525
A2123-HBT	GN	○	220-240	50/60	0.14/0.12	23/20	2700/3100	97/117	0.34/0.39	45/50	525
A2123-HBL	GN	○	220-240	50/60	0.14/0.12	23/20	2700/3100	97/117	0.34/0.39	45/50	525

Frame : Aluminum alloy

Safety : UL-CUL/TUV/CE/CCC

Air Flow-Static Pressure Characteristics

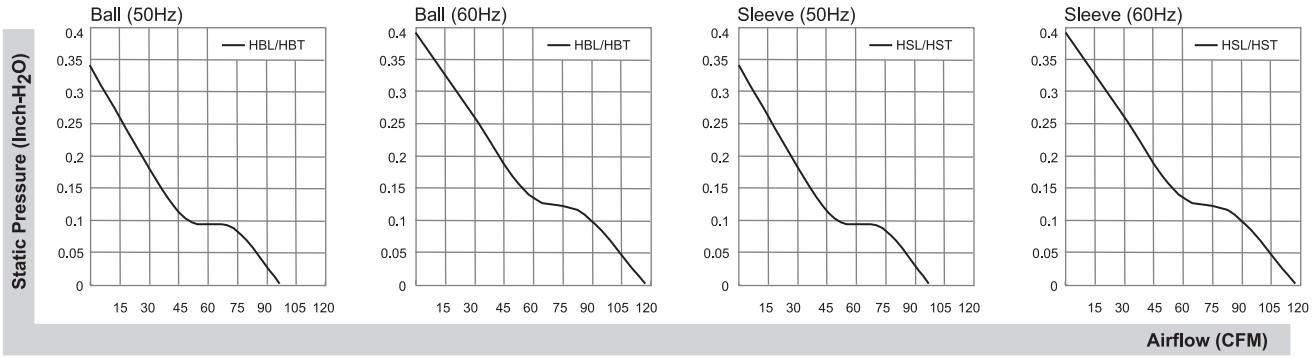

External dimensions(mm)

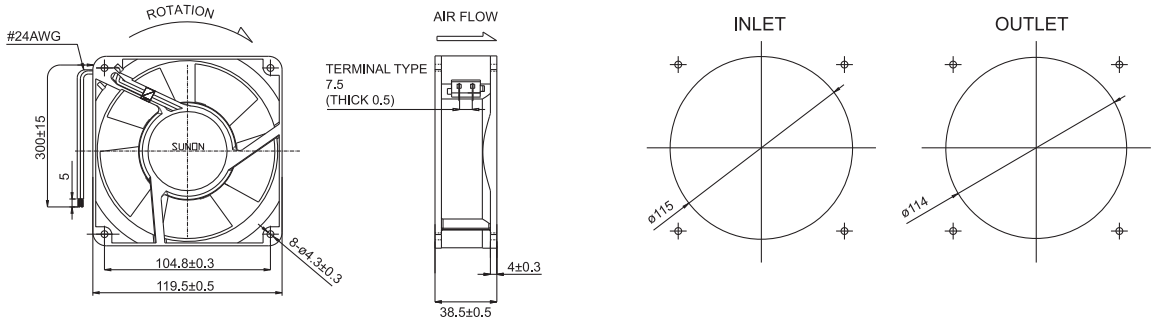

*All model could be customized. Please contact with Sunon Sales.
*Specifications are subject to change without notice. Please Visit SUNON website at http://www.sunon.com for update information.

120x120x38 mm

High Air Flow

112~124 CFM

Specifications

Model	P/N	Bearing	Rating Voltage	Freq.	Power Current	Power Consumption	Speed	Air Flow	Static Pressure	Noise	Weight
		● VAPO ○ BALL ◉ Sleeve	(VAC)	(Hz)	(AMP)	(WATTS)	(RPM)	(CFM)	(Inch-H_2O)	(dB(A))	(g)
A1123-HST	(7).GN	◉	115	50/60	0.28/0.25	23/21	2500/2750	112/124	0.30/0.28	43/46	525
A1123-HSL	(7).GN	◉	115	50/60	0.28/0.25	23/21	2500/2750	112/124	0.30/0.28	43/46	525
A1123-HBT	(7).GN	○	115	50/60	0.28/0.25	23/21	2500/2750	112/124	0.30/0.28	44/47	525
A1123-HBL	(7).GN	○	115	50/60	0.28/0.25	23/21	2500/2750	112/124	0.30/0.28	44/47	525
A2123-HST	(7).GN	◉	220-240	50/60	0.14/0.12	24/22	2500/2750	112/124	0.30/0.28	43/46	525
A2123-HSL	(7).GN	◉	220-240	50/60	0.14/0.12	24/22	2500/2750	112/124	0.30/0.28	43/46	525
A2123-HBT	(7).GN	○	220-240	50/60	0.14/0.12	24/22	2500/2750	112/124	0.30/0.28	44/47	525
A2123-HBL	(7).GN	○	220-240	50/60	0.14/0.12	24/22	2500/2750	112/124	0.30/0.28	44/47	525

Frame : Aluminum alloy

Safety : UL-CUL/TUV/CE/CCC

Air Flow-Static Pressure Characteristics

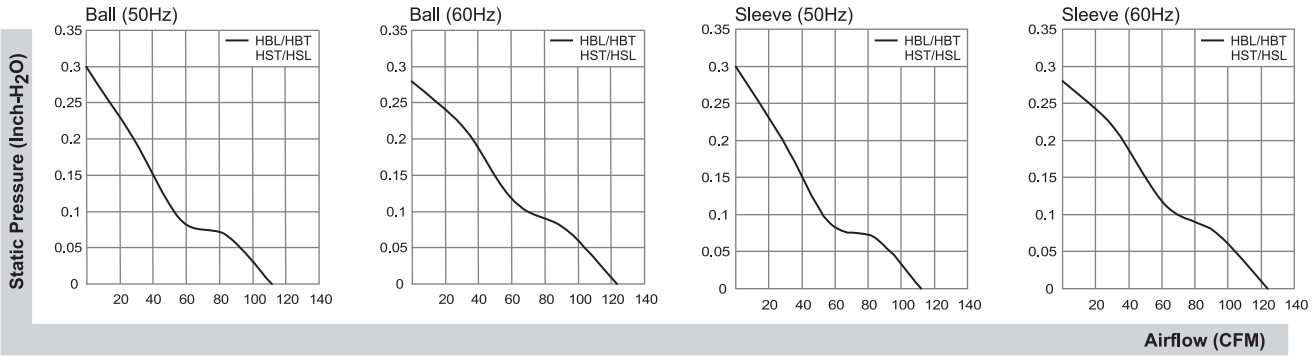

External dimensions(mm)

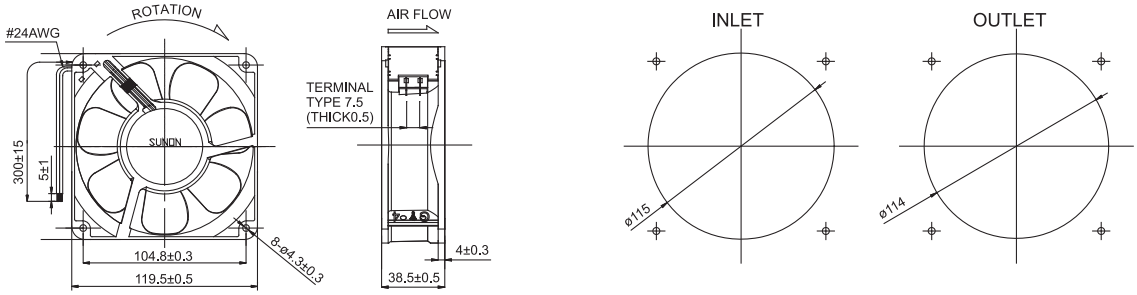

*All model could be customized. Please contact with Sunon Sales.
*Specifications are subject to change without notice. Please Visit SUNON website at http://www.sunon.com for update information.

120x120x38 mm

Dual AC Voltage

95~115 CFM

Specifications

Model	P/N	Bearing	Rating Voltage	Freq.	Power Current	Power Consumption	Speed	Air Flow	Static Pressure	Noise	Weight
		● VAPO ○ BALL ⦿ Sleeve	(VAC)	(Hz)	(AMP)	(WATTS)	(RPM)	(CFM)	(Inch-H_2O)	(dB(A))	(g)
SF1212AD	SL.GN	⦿	115	50/60	0.27/0.24	21.5/19	2700/3100	95/115	0.33/0.38	44/49	550
			220-240	50/60	0.13/0.12	19.5/19	2700/3100	95/115	0.33/0.38	44/49	550
SF1212AD	BL.GN	○	115	50/60	0.27/0.24	21.5/19	2700/3100	95/115	0.33/0.38	44/49	550
			220-240	50/60	0.13/0.12	19.5/19	2700/3100	95/115	0.33/0.38	44/49	550

Frame : Aluminum alloy

Safety : UL-CUL/TUV/CE/CCC

Air Flow-Static Pressure Characteristics

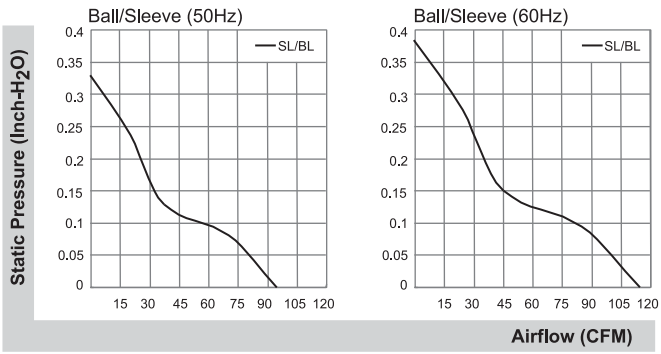

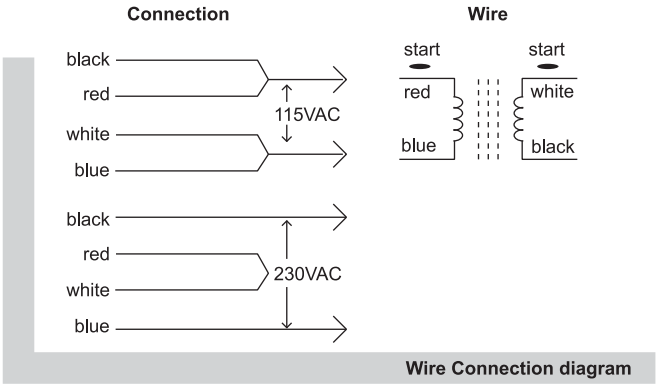

External dimensions(mm)

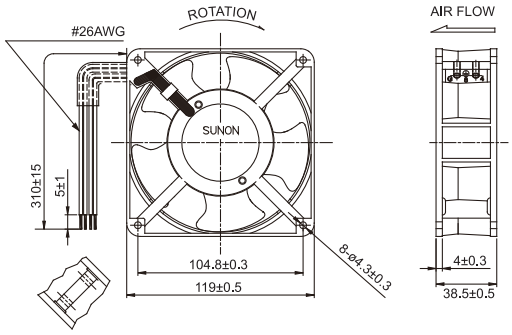

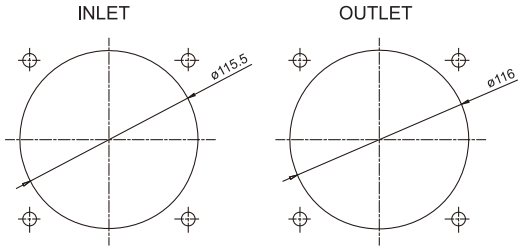

*All model could be customized. Please contact with Sunon Sales.
*Specifications are subject to change without notice. Please Visit SUNON website at http://www.sunon.com for update information.

120x120x38 mm

Low Power Consumption

49~50 CFM

Specifications

Model	P/N	Bearing	Rating Voltage	Freq.	Power Current	Power Consumption	Speed	Air Flow	Static Pressure	Noise	Weight
		● VAPO ○ BALL ⦿ Sleeve	(VAC)	(Hz)	(AMP)	(WATTS)	(RPM)	(CFM)	(Inch-H_2O)	(dB(A))	(g)
DP203A	2123LBL.(5).GN	○	220-240	50/60	0.04/0.04	8/8	1650/1600	50/49	0.08/0.07	26/25	550
DP203A	2123LBT.(5).GN	○	220-240	50/60	0.04/0.04	8/8	1650/1600	50/49	0.08/0.07	26/25	550

Frame : Aluminum alloy

Safety : TUV/CE/CCC

Air Flow-Static Pressure Characteristics

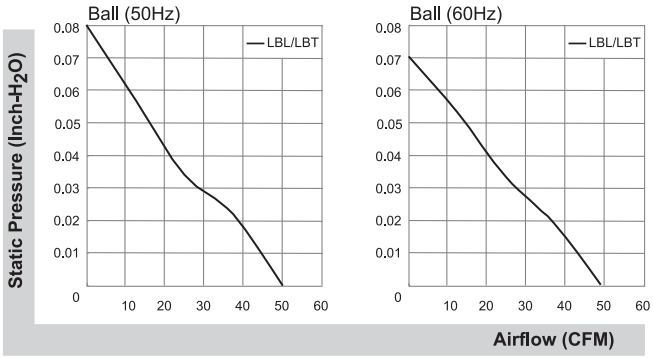

External dimensions(mm)

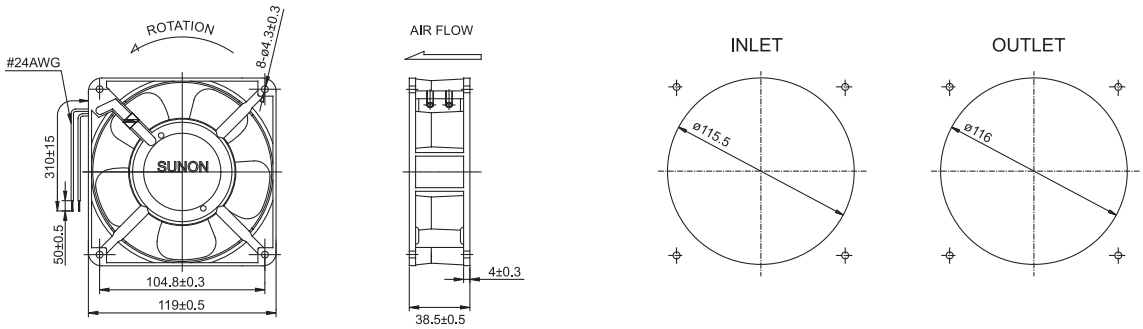

*All model could be customized. Please contact with Sunon Sales.
*Specifications are subject to change without notice. Please Visit SUNON website at http://www.sunon.com for update information.

171x151x51 mm

180~200 CFM

Specifications

Model	P/N	Bearing	Rating Voltage	Freq.	Power Current	Power Consumption	Speed	Air Flow	Static Pressure	Noise	Weight
		● VAPO ○ BALL ⦿ Sleeve	(VAC)	(Hz)	(AMP)	(WATTS)	(RPM)	(CFM)	(Inch-H_2O)	(dB(A))	(g)
A1175-HBL	T.GN	○	115	50/60	0.59/0.48	39/36	2650/2950	180/200	0.48/0.38	52/55	957
A1175-HBT	T.GN	○	115	50/60	0.59/0.48	39/36	2650/2950	180/200	0.48/0.38	52/55	957
A2175-HBL	T.GN	○	220-240	50/60	0.28/0.24	39/36	2650/2950	180/200	0.48/0.38	52/55	957
A2175-HBT	T.GN	○	220-240	50/60	0.28/0.24	39/36	2650/2950	180/200	0.48/0.38	52/55	957

Frame : Aluminum alloy

Safety : UL-CUL/TUV/CE/CCC

Air Flow-Static Pressure Characteristics

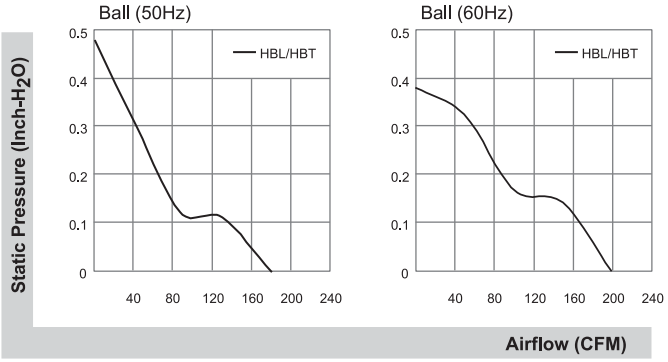

External dimensions(mm)

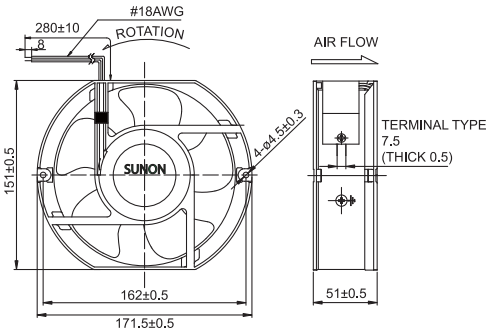

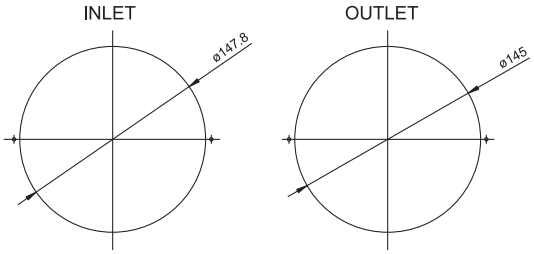

*All model could be customized. Please contact with Sunon Sales.
*Specifications are subject to change without notice. Please Visit SUNON website at http://www.sunon.com for update information.

171x151x51 mm

Alveolate Motor

203~239 CFM

Specifications

Model	P/N	Bearing	Rating Voltage	Freq.	Power Current	Power Consumption	Speed	Air Flow	Static Pressure	Noise	Weight
		● VAPO ○ BALL ⦿ Sleeve	(VAC)	(Hz)	(AMP)	(WATTS)	(RPM)	(CFM)	(Inch-H_2O)	(dB(A))	(g)
A1175-HBL	TC.GN	○	115	50/60	0.22/0.23	25/27	2800/3200	203/239	0.62/0.69	51/58	908
A1175-HBT	TC.GN	○	115	50/60	0.22/0.23	25/27	2800/3200	203/239	0.62/0.69	51/58	908
A2175-HBL	TC.GN	○	220-240	50/60	0.11/0.11	25/26	2800/3200	203/239	0.62/0.69	51/58	908
A2175-HBT	TC.GN	○	220-240	50/60	0.11/0.11	25/26	2800/3200	203/239	0.62/0.69	51/58	908

Frame : Aluminum alloy

Safety : UL-CUL/TUV/CE/CCC

Air Flow-Static Pressure Characteristics

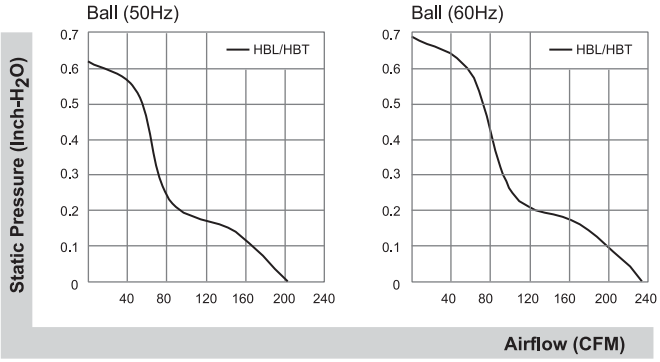

External dimensions(mm)

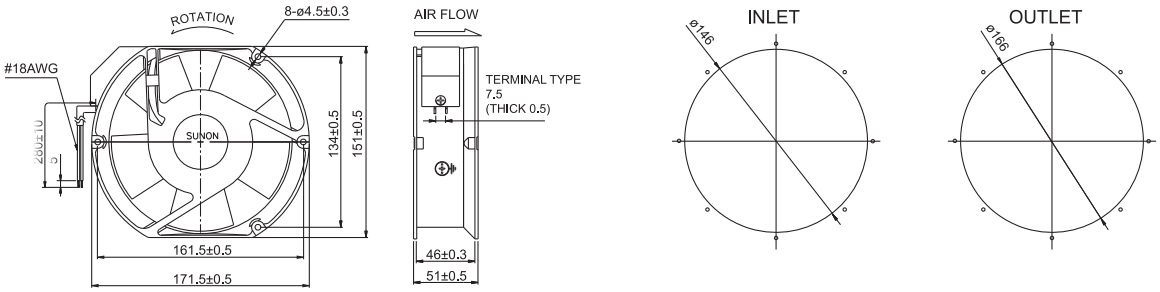

*All model could be customized. Please contact with Sunon Sales.
*Specifications are subject to change without notice. Please Visit SUNON website at http://www.sunon.com for update information.

ø171x51 mm

Alveolate Motor

203~239 CFM

Specifications

Model	P/N	Bearing	Rating Voltage	Freq.	Power Current	Power Consumption	Speed	Air Flow	Static Pressure	Noise	Weight
		● VAPO ○ BALL ⦿ Sleeve	(VAC)	(Hz)	(AMP)	(WATTS)	(RPM)	(CFM)	(Inch-H_2O)	(dB(A))	(g)
A1175-HBL	TC.R.GN	○	115	50/60	0.22/0.23	25/27	2800/3200	203/239	0.62/0.69	51/58	908
A1175-HBT	TC.R.GN	○	115	50/60	0.22/0.23	25/27	2800/3200	203/239	0.62/0.69	51/58	908
A2175-HBL	TC.R.GN	○	220-240	50/60	0.11/0.11	25/26	2800/3200	203/239	0.62/0.69	51/58	908
A2175-HBT	TC.R.GN	○	220-240	50/60	0.11/0.11	25/26	2800/3200	203/239	0.62/0.69	51/58	908

Frame : Aluminum alloy

Safety : UL-CUL/TUV/CE/CCC

Air Flow-Static Pressure Characteristics

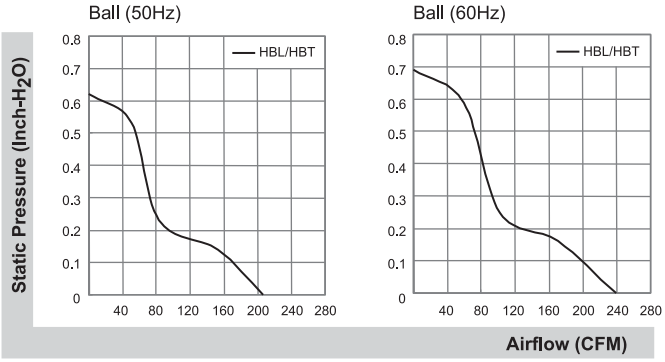

External dimensions(mm)

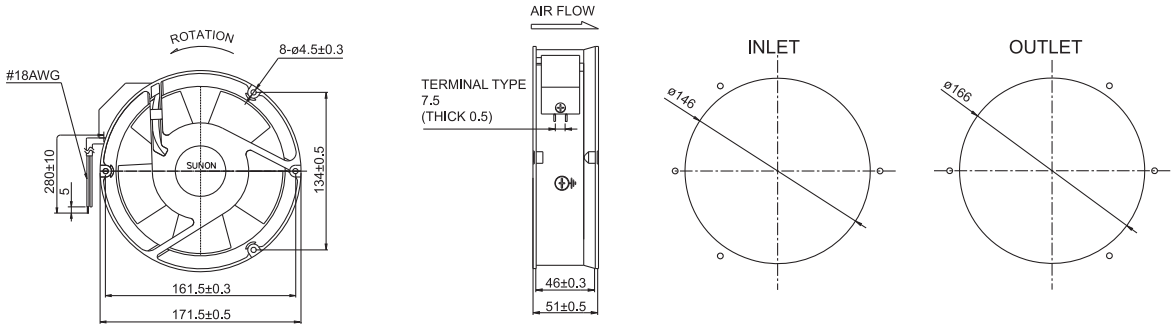

*All model could be customized. Please contact with Sunon Sales.
*Specifications are subject to change without notice. Please Visit SUNON website at http://www.sunon.com for update information.

176x176x89 mm

Alveolate Motor

315~335 CFM

Specifications

Model	P/N	Bearing	Rating Voltage	Freq.	Power Current	Power Consumption	Speed	Air Flow	Static Pressure	Noise	Weight
		● VAPO ○ BALL ⦿ Sleeve	(VAC)	(Hz)	(AMP)	(WATTS)	(RPM)	(CFM)	(Inch-H_2O)	(dB(A))	(g)
A1179-HBT	TC.GN	○	115	50/60	0.25/0.27	24/30	2800/3250	315/335	0.65/0.8	62/66	1960
A1179-HBL	TC.GN	○	115	50/60	0.25/0.27	24/30	2800/3250	315/335	0.65/0.8	62/66	1960
A2179-HBT	TC.GN	○	220-240	50/60	0.11/0.15	23/30	2800/3250	315/335	0.65/0.8	62/66	1960
A2179-HBL	TC.GN	○	220-240	50/60	0.11/0.15	23/30	2800/3250	315/335	0.65/0.8	62/66	1960

Frame : Aluminum alloy

Safety : UL-CUL/TUV/CE/CCC

Air Flow-Static Pressure Characteristics

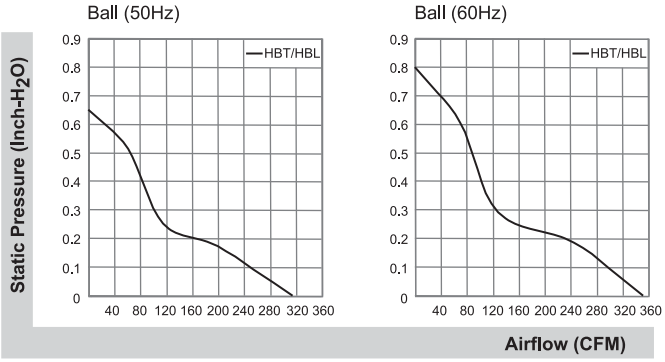

External dimensions(mm)

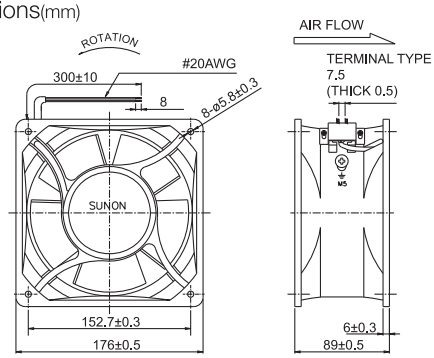

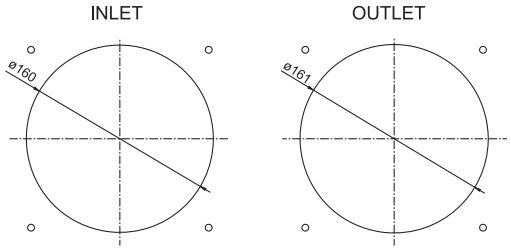

*All model could be customized. Please contact with Sunon Sales.
*Specifications are subject to change without notice. Please Visit SUNON website at http://www.sunon.com for update information.

ø254x89 mm

Alveolate Motor

425~870 CFM

Specifications

Model	P/N	Bearing	Rating Voltage	Freq.	Power Current	Power Consumption	Speed	Air Flow	Static Pressure	Noise	Weight
		● VAPO ○ BALL ⦿ Sleeve	(VAC)	(Hz)	(AMP)	(WATTS)	(RPM)	(CFM)	(Inch-H_2O)	(dB(A))	(g)
A1259-MBL	TC.N.GN	○	115	50/60	0.23/0.23	20/23	1400/1600	425/500	0.27/0.31	54/57	2300
A1259-MBT	TC.N.GN	○	115	50/60	0.23/0.23	20/23	1400/1600	425/500	0.27/0.31	54/57	2300
A1259-HBL	TC.N.GN	○	115	50/60	0.60/0.65	63/72	2100/1900	650/585	0.35/0.31	62/60	2300
A1259-HBT	TC.N.GN	○	115	50/60	0.60/0.65	63/72	2100/1900	650/585	0.35/0.31	62/60	2300
A1259-XBL	TC.N.GN	○	115	50/60	0.83/1.10	88/120	2600/2900	800/870	0.76/0.62	68/70	2400
A1259-XBT	TC.N.GN	○	115	50/60	0.83/1.10	88/120	2600/2900	800/870	0.76/0.62	68/70	2400
A2259-MBL	TC.N.GN	○	220-240	50/60	0.15/0.13	23/30	1400/1600	425/500	0.27/0.31	54/57	2300
A2259-MBT	TC.N.GN	○	220-240	50/60	0.15/0.13	23/30	1400/1600	425/500	0.27/0.31	54/57	2300
A2259-HBL	TC.N.GN	○	220-240	50/60	0.24/0.27	56/60	2100/1900	650/585	0.35/0.31	62/60	2300
A2259-HBT	TC.N.GN	○	220-240	50/60	0.24/0.27	56/60	2100/1900	650/585	0.35/0.31	62/60	2300

Frame : Aluminum alloy

Safety : UL-CUL/TUV/CE/CCC

Air Flow-Static Pressure Characteristics

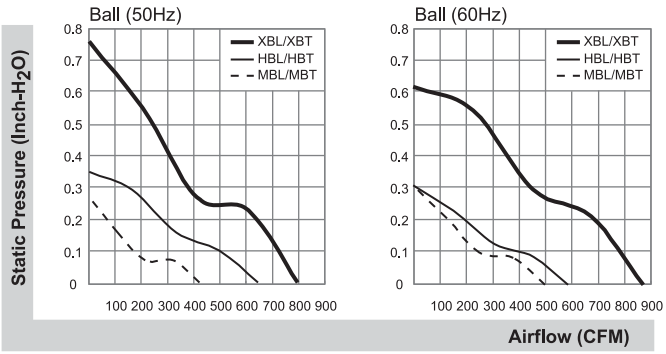

External dimensions(mm)

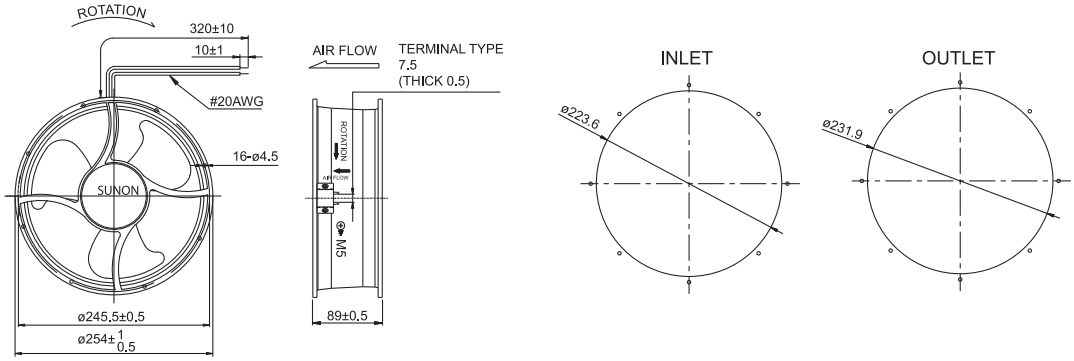

*All model could be customized. Please contact with Sunon Sales.
*Specifications are subject to change without notice. Please Visit SUNON website at http://www.sunon.com for update information.

120x120x31 mm

20~22 CFM

Specifications

Model	P/N	Bearing	Rating Voltage	Freq.	Power Current	Power Consumption	Speed	Air Flow	Static Pressure	Noise	Weight
		● VAPO ○ BALL ⦿ Sleeve	(VAC)	(Hz)	(AMP)	(WATTS)	(RPM)	(CFM)	(Inch-H_2O)	(dB(A))	(g)
AB1123-HST	GN	⦿	115	50/60	0.25/0.21	20/18	2600/2900	20/22	0.32/0.46	48/50	678
AB1123-HSL	GN	⦿	115	50/60	0.25/0.21	20/18	2600/2900	20/22	0.32/0.46	48/50	678
AB1123-HBT	GN	○	115	50/60	0.25/0.21	20/18	2600/2900	20/22	0.32/0.46	48/50	678
AB1123-HBL	GN	○	115	50/60	0.25/0.21	20/18	2600/2900	20/22	0.32/0.46	48/50	678
AB2123-HST	GN	⦿	220-240	50/60	0.14/0.11	20/18	2600/2900	20/22	0.32/0.46	48/50	678
AB2123-HSL	GN	⦿	220-240	50/60	0.14/0.11	20/18	2600/2900	20/22	0.32/0.46	48/50	678
AB2123-HBT	GN	○	220-240	50/60	0.14/0.11	20/18	2600/2900	20/22	0.32/0.46	48/50	678
AB2123-HBL	GN	○	220-240	50/60	0.14/0.11	20/18	2600/2900	20/22	0.32/0.46	48/50	678

Frame : Aluminum alloy

Safety : UL-CUL/TUV/CE/CCC

Air Flow-Static Pressure Characteristics

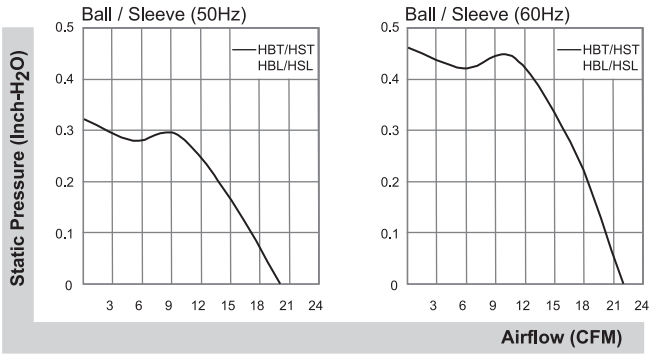

External dimensions(mm)

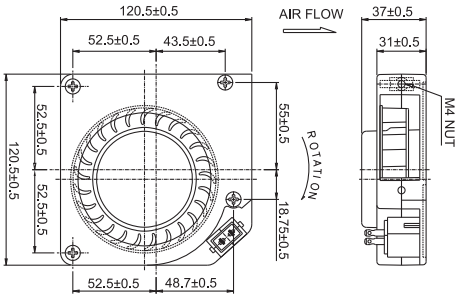

*All model could be customized. Please contact with Sunon Sales.
*Specifications are subject to change without notice. Please Visit SUNON website at http://www.sunon.com for update information.

www.sunon.com

SUNON®

Headquarters
Sunonwealth Electric Machine Industry Co., Ltd.
TEL : +886-7-8135888
E-mail : sunon@sunon.com

Sunon Inc. (U.S.A.)
TEL : +1-714-255-0208
E-mail : info@sunon.com

Sunon SAS (Europe)
TEL : +33-1-46154515
E-mail : europe@sunon.com

2020/09/18 (257-E)

© 2020 SUNONWEALTH Electric Machine Industry Co., Ltd.